adertech

CMP-U20BC

4K UHD PTZ Camera

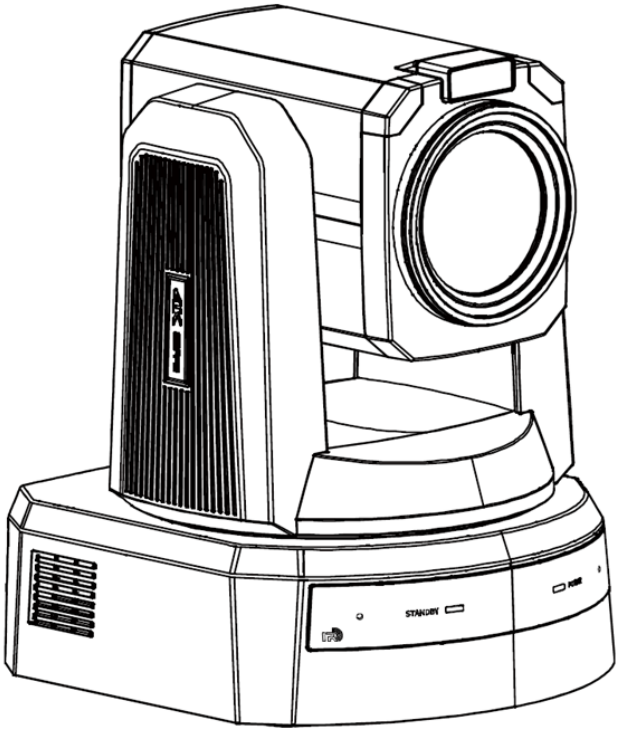

User Manual

Copyright

All contents of this manual, whose copyright belongs to our corporation, cannot be cloned, copied or translated without the permission of our corporation.

Limitation of Liability

This manual does not contain any warranties or implied warranties of any kind. The contents of this manual may be updated at any time without notice.

FCC NOTICE (Class A)

This product complies with Part 15 of the FCC Rules. The operation is subject to the following two conditions: (1) this device may not cause harmful interference, and (2) this device must accept any interference received, including interference that may cause undesired operation.

Note

This product has been tested and found to comply with the limits for a Class A digital device, pursuant to Part 15 of the FCC Rules. These limits are designed to provide reasonable protection against harmful interference in a residential installation. This equipment generates uses and can radiate radio frequency energy and, if not installed and used in accordance with the instructions, may cause harmful interference to radio communications. However, there is no guarantee that interference will not occur in a particular installation. If this equipment does cause harmful interference to radio or television reception, which can be determined by turning the equipment off and on, the user is encouraged to try to correct the interference by one or more of the following measures:

- Reorient or relocate the receiving antenna.
- Increase the separation between the equipment and receiver.
- Connect the equipment into an outlet on a circuit different from that to which the receiver is connected.
- Consult the dealer or an experienced radio/television technician for help.

Class A ITE

Class A ITE is a category of all other ITE which satisfies the class A ITE limits but not the class B ITE limits. Such equipment should not be restricted in its sale but the following warning shall be included in the instructions for use:

Warning

Operating this equipment in a residential environment may cause radio interference.

European Community Compliance Statement (Class A)

This product is herewith confirmed to comply with the requirements set out in the Council Directives on the Approximation of the laws of the Member States relating to Electromagnetic Compatibility Directive 2014/30/EU.

Contents

1 Safety Precautions....1
2 Pack List....1
3 Product Connection....1
4 Video System....2
5 About Product....2
5.1 Features....2
5.2 Indicator and Port....3
5.3 Dimension....5
5.4 Installation....6
5.4.1 Wall Mount....6
5.4.2 Ceiling Mount....7
5.5 Control Camera....8
5.6 Remote Control....9
6 WEB Settings....10
7 AI Tracking....12
7.1 WEB Control....12
7.2 Remote Control....23
7.3 Target Selection....24
8 Troubleshooting....25

1 Safety Precautions

- During the installation and use of the equipment, all electrical safety regulations of the country and region of use must be strictly observed.
- Please use the power adapter that comes standard with this product.
- Do not rotate head of the camera by hand, otherwise it may cause mechanical failure.
- When installing this product on a wall or ceiling, secure the device securely. When installing, make sure that there are no obstacles within the rotation range of the gimbal; do not turn on the power until all installations are completed.
- To avoid heat build-up, keep ventilation around the device smooth.
- If the device emits smoke, smells, or makes noises, please turn off the power immediately and unplug the power cord, and contact the dealer in time.
- This device is not waterproof, please keep the device dry.
- This product has no user serviceable parts, damage caused by disassembly by the user is not covered by the warranty.

Notice

Specific frequencies of electromagnetic field may affect the image of the camera!

2 Pack List

Name	Quantity
Camera	1
Remote Control	1
Power Adapter	1
Power Cable	1
Network Cable	1
Installation Bracket (Optional)	1
Bracket Screw Package (Optional)	1
User Manual	1

3 Product Connection

1) Please check connections are correct before starting.

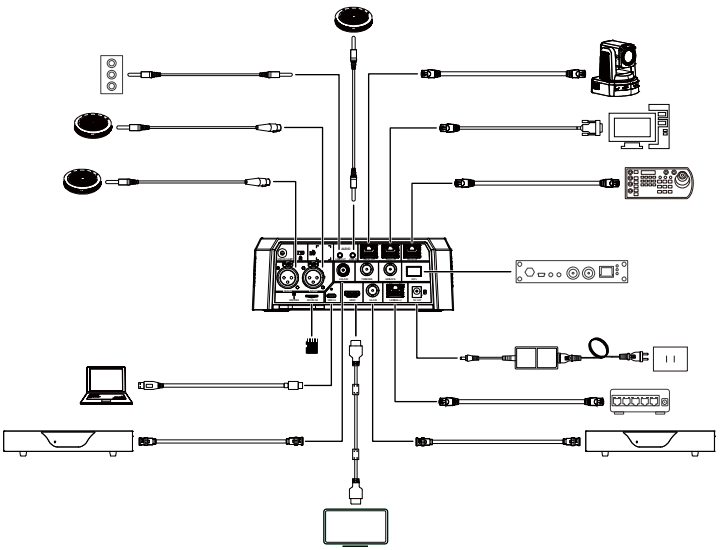

Note The schematic diagram is for reference only. Please refer to the actual application scenario for product connection.

2) After powering on the camera, it begins initialization. It first rotates to the lower-left limit position, then moves to the upper-right and lower-left limit positions, and finally returns to the HOME position. The motors stop, and initialization is complete. (Note: If preset position 0 has been saved, the PTZ will rotate to preset position 0.)

4 Video System

HDMI/12G-SDI		3G-SDI	
0	1080P60	0	1080P60
1	1080P50	1	1080P50
2	1080I60	2	1080I60
3	1080I50	3	1080I50
4	1080P30	4	1080P30
5	720P60	5	720P60
6	1080P29.97	6	1080P29.97
7	1080I59.94	7	1080I59.94
8	1080P59.94	8	1080P59.94
9	720P59.94	9	720P59.94
A	4KP29.97	A	1080P29.97
B	4KP59.94	B	1080P59.94
C	4KP25	C	1080P25
D	4KP30	D	1080P30
E	4KP50	E	1080P50
F	4KP60	F	1080P60

Notice

After switching the video system, you need to restart the camera before taking effect!

5 About Product

5.1 Features

- **Extra-large CMOS for Realistic Scene Reproduction**

The new 4/3-inch high-quality UHD CMOS sensor has a larger photosensitive target than most 1/2.5-inch image sensors on the market, enabling 4K (3840x2160) ultra-high-resolution high-quality images with excellent sensitivity and rich natural colors.

- **20x Optical Zoom to Capture Vivid Details**

Equipped with an ultra-high resolution 4K telephoto lens, support 71° horizontal field of view and 20x optical zoom, breaking distance limitations. Whether capturing the entire view of events or conferences, or focusing on details and exciting moments, camera makes it easy to capture clear, vivid and deep images, with every frame being a blockbuster that dramatically enhances the viewing experience.

- **AI Speaker Tracking liberates the director's hands**

Built-in proprietary ReID (person re-identification) technology, accurately identifies the speaker's body shape, appearance, clothing, and more. As the speaker moves within the conference room, the camera automatically stabilizes and follows, ensuring the speaker remains centered in the frame. Even if multiple people interfere or the speaker moves out of frame and returns, they can be quickly tracked and followed, rivaling the capabilities of professional photographers.

- **Virtual Studio Construction with Real-Time Camera Position Alerts**

Supports FreeD protocol for precise camera positioning data transmission, facilitating easy creation of virtual studios. Equipped with front and rear Tally display lights, allowing live broadcast personnel to easily monitor the real-time status of cameras. Visual cues help coordinate the work of various positions, keeping track of program progress promptly.

- **NDI|HX2 (Optional)**

NDI|HX2 is a new generation of network video transmission method known for plug-and-play capability, low latency, easy deployment, strong ecosystem, and support simultaneous transmission of audio, video, and control signals.

- **Low Illumination**

The new CMOS image sensor with ultra-high signal-to-noise ratio effectively reduces image noise in low-light conditions. The application of 3D noise reduction significantly decreases image noise, ensuring clean and clear images even in low-light condition.

- **Multi-Interface Design**

Equipped with HDMI, 12G-SDI, 3G-SDI, USB, and network interfaces, capable of simultaneously outputting five channels of high-definition digital signals. Supports multiple control methods including RS232, RS422, network, and USB interfaces for camera control. Enhanced device compatibility makes it suitable for a wide range of applications including virtual studios, large auditorium broadcasts, live exhibitions, and remote teaching scenarios.

5.2 Indicator and Port

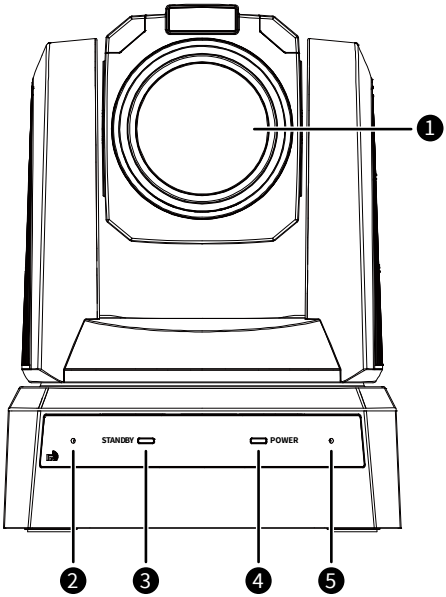

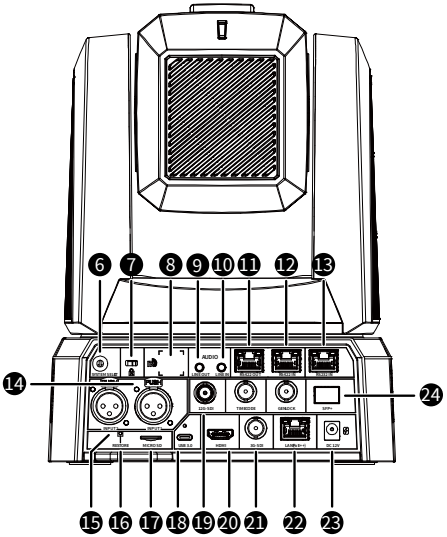

No.	Name
1	Camera Lens
2	Microphone
3	STANDBY Indicator
4	POWER Indicator
5	Microphone
6	System Select Switch
7	Security Lock Slot
8	IR Window
9	LINE OUT Port
10	LINE IN Port
11	RS422 OUT Port
12	RS422 IN Port
13	RS232 IN Port
14	INPUT1 Port
15	INPUT2 Port
16	RESTORE Key
17	MICRO SD Slot
18	USB 3.0 Port
19	12G-SDI Port
20	HDMI Port
21	3G-SDI Port
22	LAN (PoE++) Port
23	DC 12V Port
24	SFP+ Port

Note

TIME CODE and GENLOCK ports are not enabled.

- **RS422 OUT/IN Port**

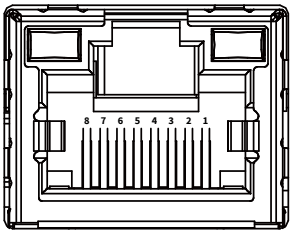

No.	Function	No.	Function
1	GND	5	TX+
2	NC	6	RX+
3	RX-	7	NC
4	TX-	8	NC

Correspondence between RS422 OUT and RS422 IN pins:

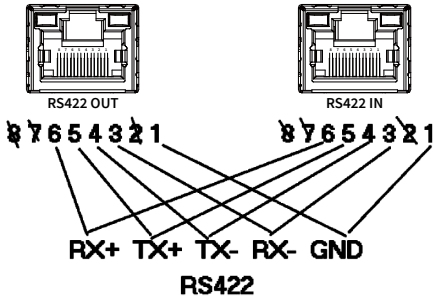

- **RS232 IN Port**

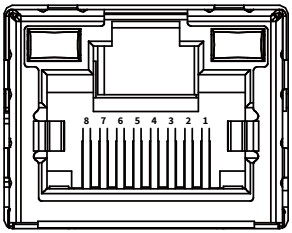

No.	Function	No.	Function
1	NC	5	NC
2	NC	6	TX
3	RX	7	IR
4	NC	8	GND

Correspondence of RS232 IN pins:

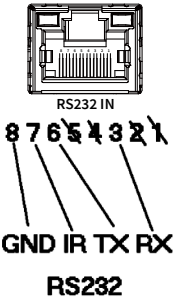

5.3 Dimension

Unit: mm

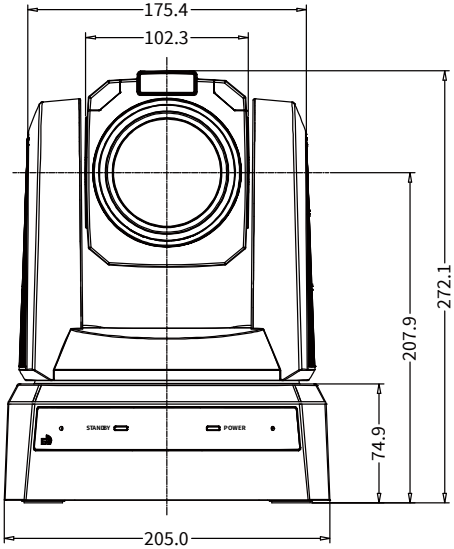

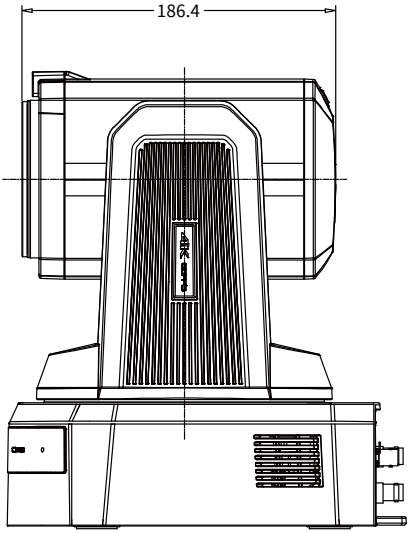

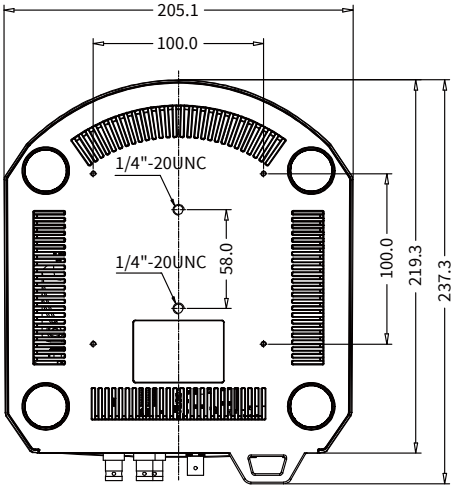

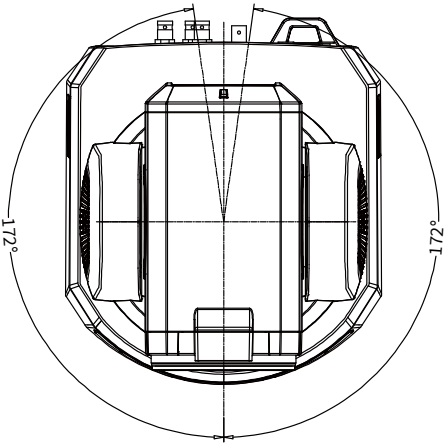

5.4 Installation

5.4.1 Wall Mount

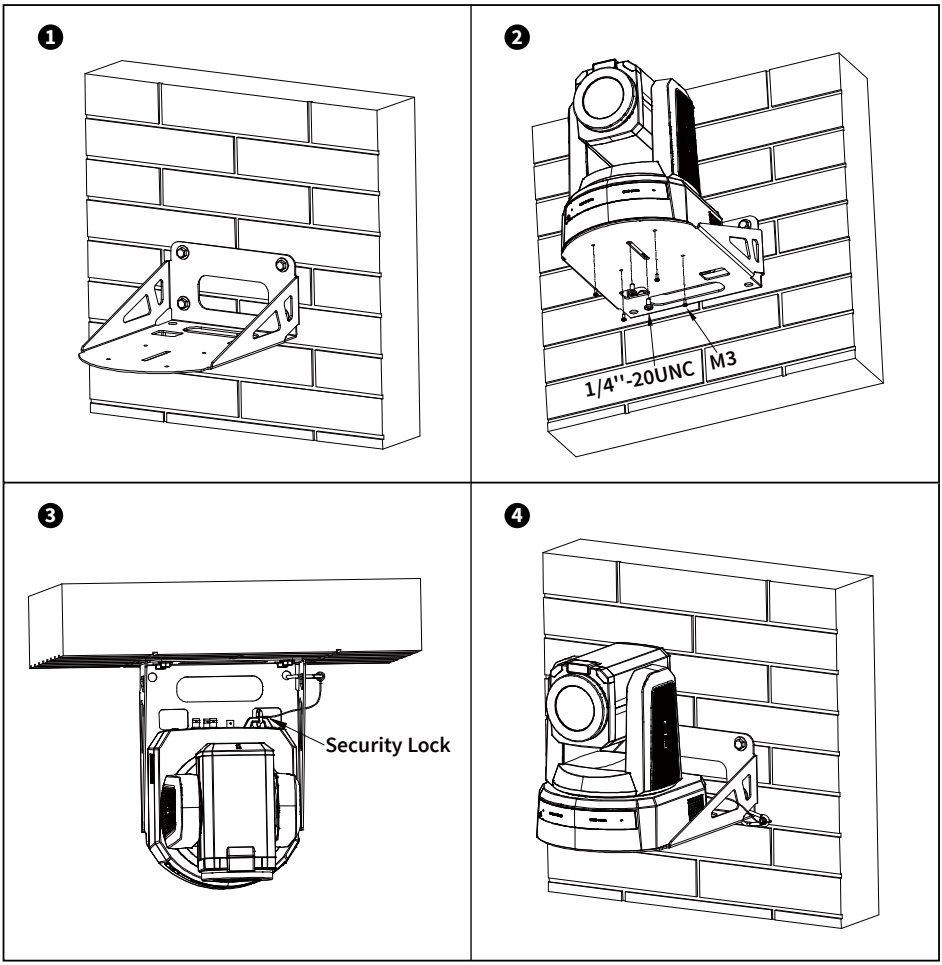

5.4.2 Ceiling Mount

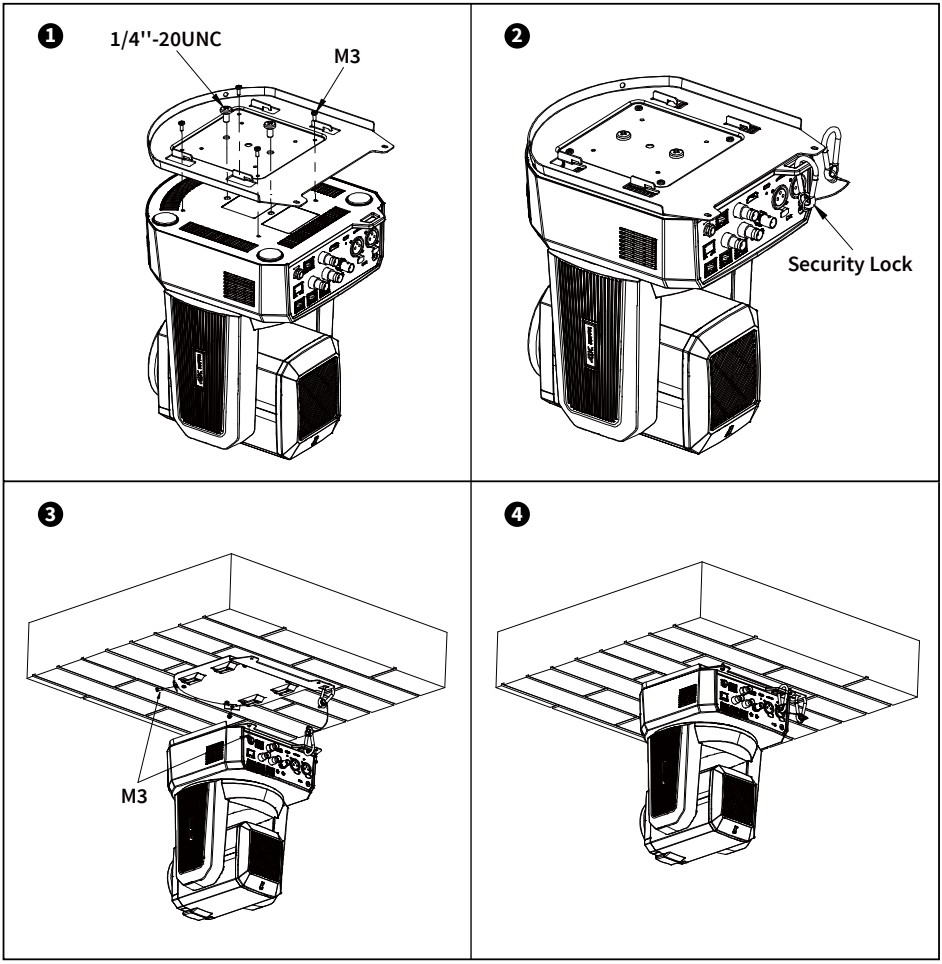

Note The above installation diagram is for reference only, please refer to actual product for the installation accessories.

5.5 Control Camera

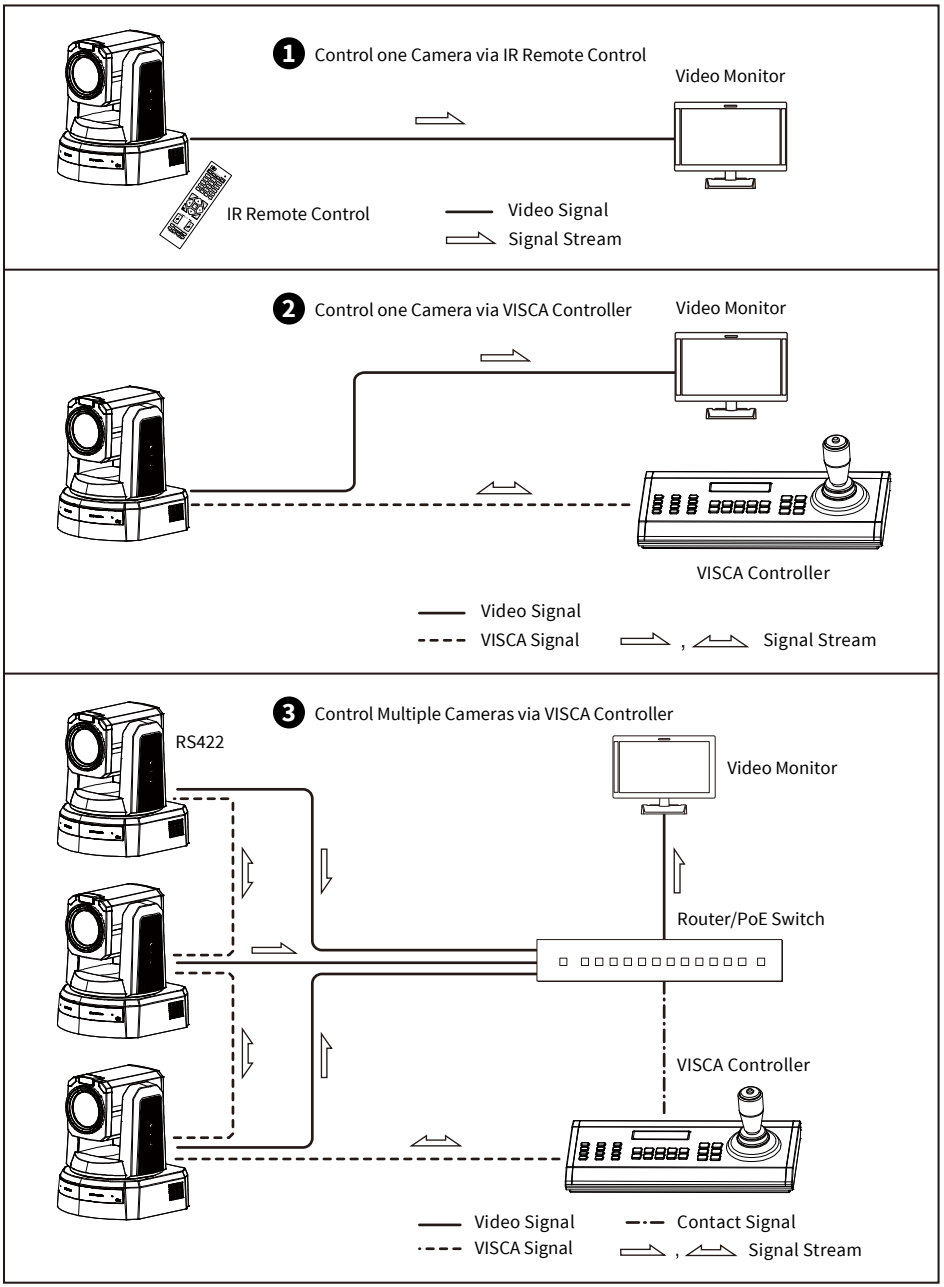

5.6 Remote Control

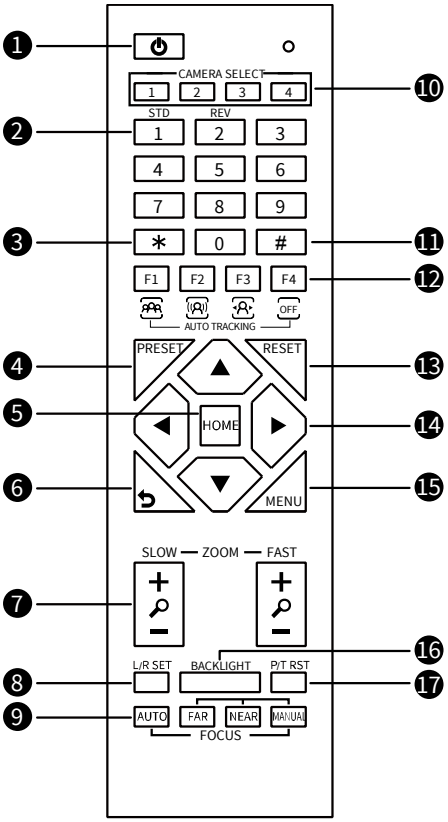

Key Description
1. ⏻ (Standby) Key
Press to enter standby mode
2. Number Keys
To set preset or call preset
3. * Key
Use with other keys
4. PRESET Key
Set preset: Successively press [PRESET] + Number key (0-9)
5. HOME Key
Confirm selection or press to turn PTZ back to the middle position
6. ⮌ (Return) Key
Press to return to the previous menu
7. ZOOM Keys
● SLOW: Zoom In [+] or Zoom Out [-] slowly ● FAST: Zoom In [+] or Zoom Out [-] fast
8. L/R SET Key
● Standard: Simultaneously press [L/R SET] + [1] ● Reverse: Simultaneously press [L/R SET] + [2]
9. FOCUS Keys
Auto/Manual/Far-end/Near-end focus
10. CAMERA SELECT Keys
Press to select and control the camera
11. # Key
Use with other keys
12. Auto Tracking Keys
[F1]: Disable [F2]: Disable [F3]: Turn On AI Tracking [F4]: Turn Off AI Tracking
13. RESET Key
Clear preset position: Successively press [RESET] + Number key (0-9)
14. PTZ Control Keys
PTZ moved according to the arrow indicates
15. MENU Key
Enter OSD menu or back to the previous menu
16. BACKLIGHT Key
Backlight ON/OFF: Press repeatedly to enable or disable the backlight compensation ● Effective only in auto exposure mode ● If there is a light behind the subject, the subject will become dark, press the backlight key to enable the backlight compensation. Press again to disable this function.
17. P/T RST (PTZ Reset) Key
Press to preset Pan/Tilt self-test
Shortcut Set
Successively press [#] + [*] + [F4]: Enable or disable the Image Freeze Successively press [*] + [#] + [1]: OSD menu default English Successively press [*] + [#] + [3]: OSD menu default Chinese Successively press [*] + [#] + [4]: Display current IP address Successively press [*] + [#] + [6]: Quickly recover the default Successively press [*] + [#] + [8]: Check the camera version Successively press [*] + [#] + [9]: Quickly set up inversion Successively press [*] + [#] + [MANUAL]: Restore to default IP address Successively press [*] + [#] + [RESET]: Clear all preset positions

6 WEB Settings

To access the WEB interface, enter the default IP address of the camera (192.168.100.88) in the browser. The login page will appear. Enter the username (default: admin) and password (for first-time login, you need to set a password, which must include uppercase and lowercase letters, numbers, special characters, and be at least 9 characters long) to login to the WEB interface.

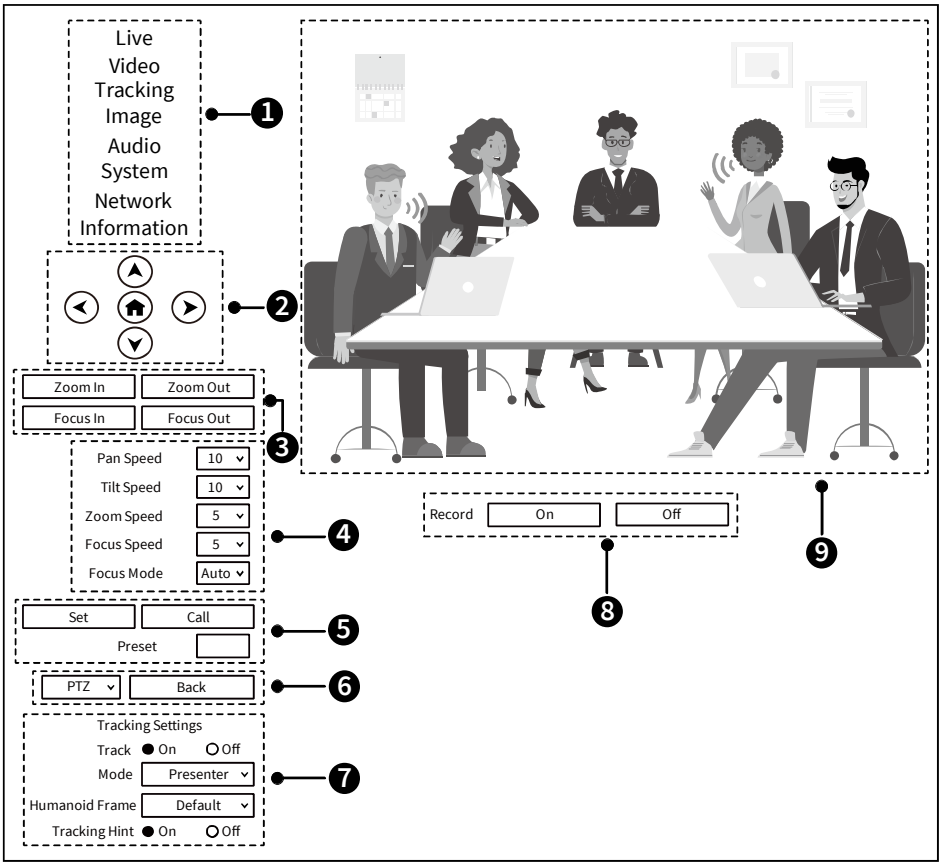

1) WEB Configuration Items

Live: Preview camera video image.

Video: Set Video Format, Encode Codec, Encode Level, Resolution, Bit Rate, Frame Rate, I Key Frame Interval and Bit Rate Control.

Tracking: Set Presenter, Zone and Auto Frame.

Image: Set Image Exposure, Color, Image, Focus, Noise Reduction and Style.

Audio: Turn On/Off Audio Switch and ADTS Options. Set Audio Type, Sample Rate, Bit Rate and Input Type.

System: Set Initialize, User, System Upgrade, Record Settings and SD Flash Disk Information.
Network: Set LAN, Port, RTMP(S), SRT, RTSP, ONVIF, Multicast, FreeD, and NTP.
Information: View camera information.

2) Pan and Tilt Control

Used to control the direction of PTZ rotation (up, down, left, right, HOME position rotation).

3) Zoom/Focus

“Zoom In” means to zooming in the lens, “Zoom Out” means to zooming out the lens.
“Focus In” means to focus on a nearby object, “Focus Out” means to focus on a distant object.

4) PTZ Speeds

“Pan Speed” can be selected from 1~24, “Tilt Speed” can be selected from 1~20. After selecting the desired speed values, using the pan/tilt direction keys allows for fast or slow movement of the PTZ.
“Zoom Speed” can be selected from 1~7, “Focus Speed” can be selected from 1~7. After selecting the respective speed, using the zoom control area enables fast or slow zoom/focus adjustment of the lens.
“Focus Mode” can be selected Auto/Manual. When be selected “Manual”, “Focus In” and “Focus Out” then will to take effect. “Focus Mode” can be selected Auto/Manual.

5) PTZ Presets

When the PTZ turns to the position that you would like to return to later, you can set presets for quick recall. Type a number (0~254) into the preset box and click “Set” button to save.
When the PTZ turn to other position, input the preset number and click “Call” button to turn the PTZ back to the preset position.

6) PTZ/OSD

When “Menu” is selected, the image preview page enters menu mode, and the OSD menu is displayed in the top left corner of the image preview page. You can use the up and down selection keys in the PTZ direction control area to navigate through the menu. Pressing the HOME key enters a submenu, and the left and right keys modify the submenu. After making modifications in the menu, select “PTZ” in the PTZ/menu selection area to automatically save the settings and exit the menu. The “Back” is only valid in submenu mode and is not effective in PTZ mode or main menu mode.
When “PTZ” is selected, the system enters PTZ mode. The up and down selection keys in the PTZ direction control area control the camera's pan and tilt movements. OSD menu control is not available in PTZ mode and must be controlled using a remote controller for effective operation.

7) Tracking Settings

Turn On/Off the Track or Tracking hint. Set Tracking Mode and Humanoid frame.

8) Record

Turn On/Off video record.

9) Media Preview Window

Preview camera video image.

7 AI Tracking

7.1 WEB Control

- **Speaker (Presenter)/Human Tracking**

By modifying web interface parameters, different close-up ratios can be obtained, and tracking can be set on/off, so as to display areas and character positions. If necessary, you can also choose whether to display tracking related prompt information.

Operation Steps:

Step 1 Entering the camera IP address (192.168.100.88) in the browser prompts a login interface. Input the username and password to access the camera WEB interface.

http://192.168.100.88

Step 2 Enter the “Tracking” option, select speaker mode “Presenter”, and set the tracking parameters in the “Track Off” state.

Tracking Mode: Speaker (Presenter)/Area (Zone)/Auto Frame.

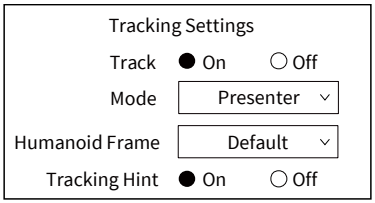

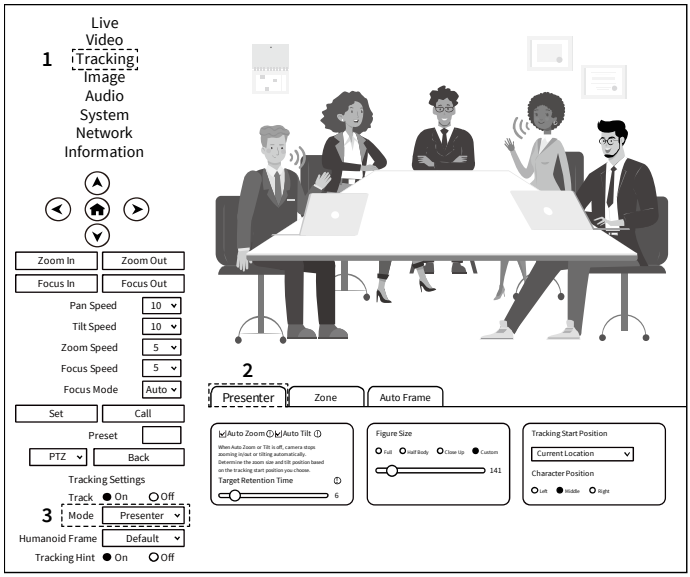

Step 3 Set the Target Retention Time, the default value is 6 seconds.

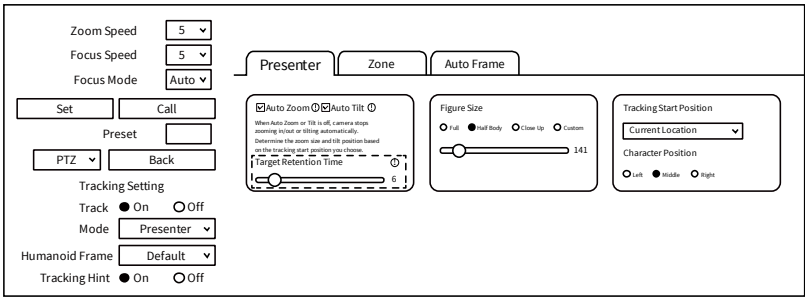

Auto Zoom: Usually remains the default. When “Auto Zoom” is turned off, the camera lens can still move, but can only maintain the current magnification and cannot zoom.

Auto Tilt: Usually remains default. When “Auto Tilt” is turned off, the camera lens can only move horizontally.

Target Retention Time: can remain default. It is an important function to set how long it takes for the camera lens to stay at current position or return to preset position 1 after the tracking target is lost. The modification here takes effect immediately.

Step 4 Select the desired close-up effect.

- **Figure Size**

By selecting different modes, users can customize the proportion of characters in the close-up screen, which is a very important feature. The modification here takes effect immediately.

Full: The close-up image includes tracking the entire body of the target, as shown in the following figure.

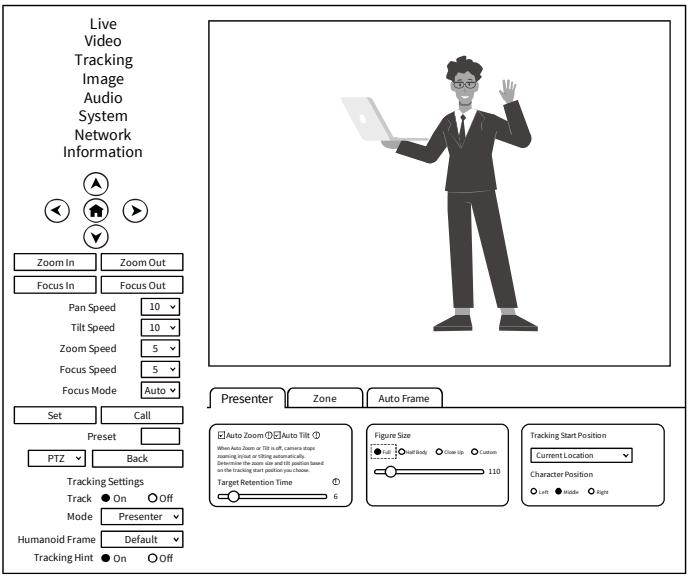

Half Body: The close-up image includes tracking the target above the knee, as shown in the following figure.

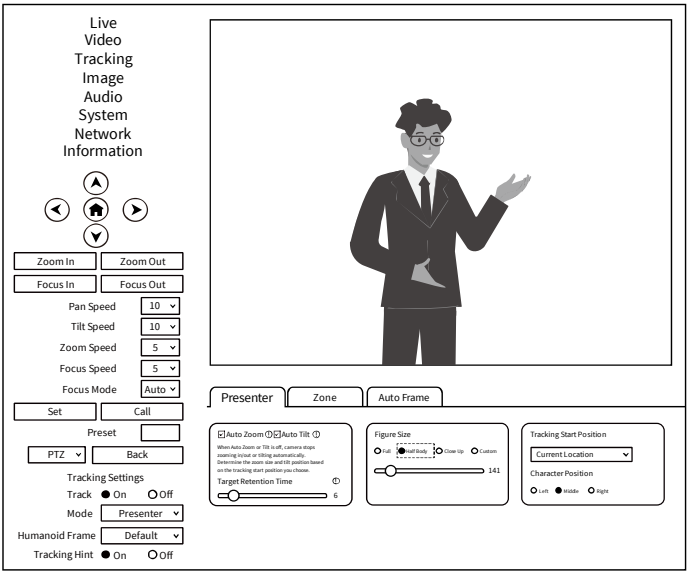

Close Up: The close-up image includes tracking the target above the waist, as shown in the following figure.

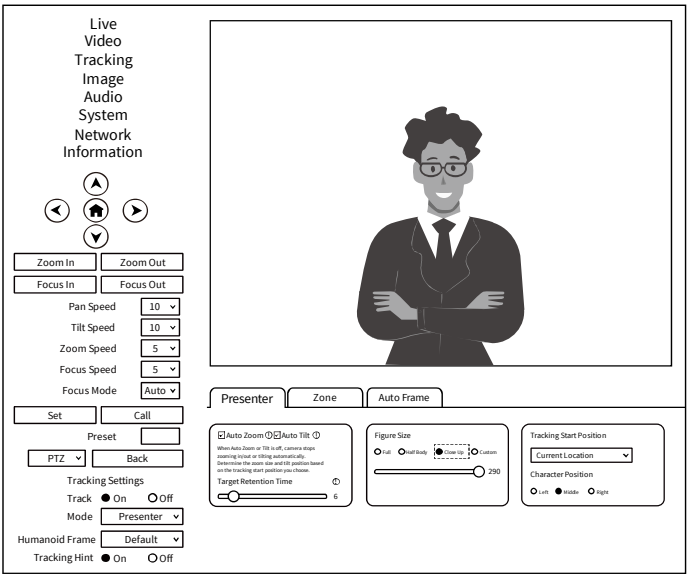

Custom: Adjust the tracking target proportion size.

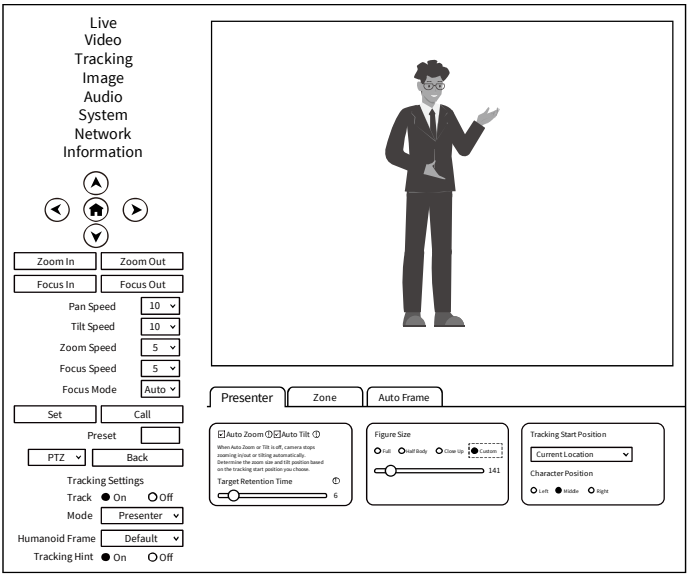

Note

If the proportion set is large, the proportion of the tracking target in the camera screen will also increase. When the tracking target moves rapidly, the camera may not keep up.

- **Tracking Start Position**

The user can choose the position of the camera lens when starting and stopping tracking.

Two Mode: Current Location/Preset 1

If you choose “Current Location”, the camera position when tracking is turned on is the current position; Similarly, the camera position when stopping tracking will also stop at the current position.

If you choose “Preset 1”, you need to set additional preset position 1 for the camera. When tracking is turned on, the camera will first move to Preset 1. If someone enters the video screen at this time, the camera will automatically track. When the tracking target is lost (exceeding the timeout), the camera will automatically move to Preset 1.

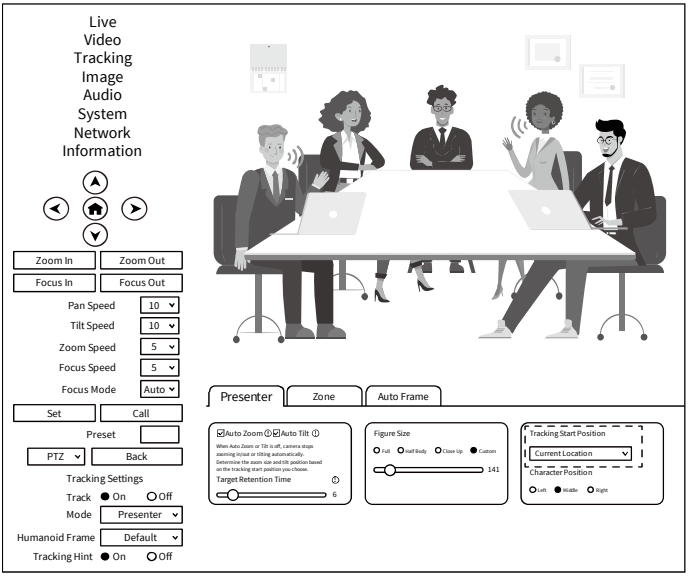

- **Character Position**

Character Position: defaults to median. Left or right can be selected by oneself, and this function is mostly used for live streaming scenes.

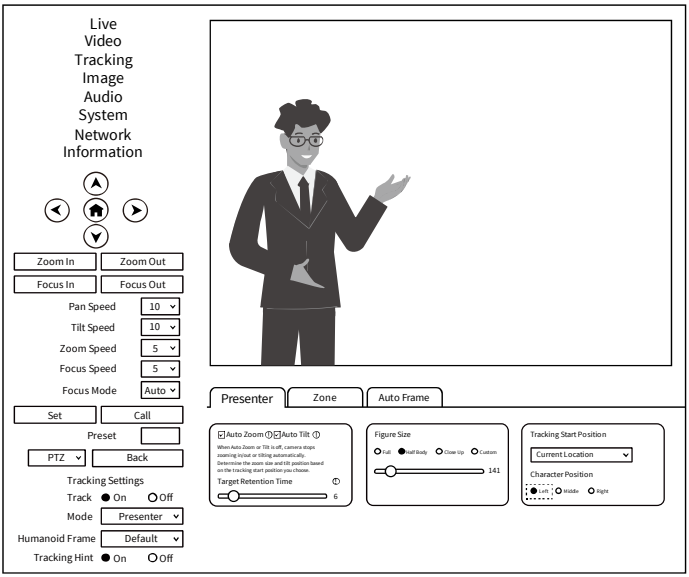

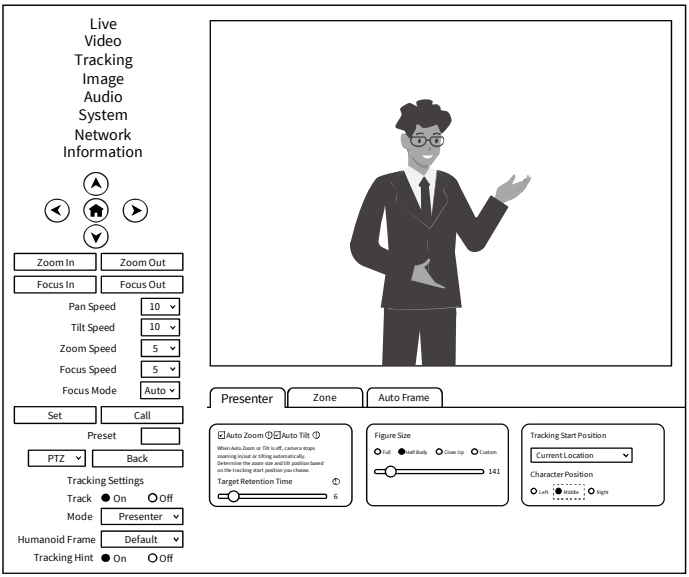

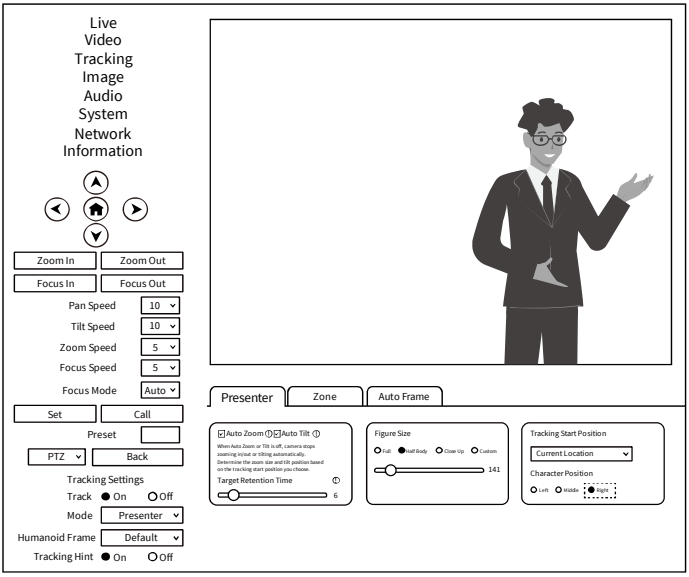

Step 5 According to the requirements of the application scenario, you can choose whether to require "Humanoid frame" and "Tracking hint".

Humanoid frame: Debug/Off/Default

Debug: Turn on tracking, and the humanoid box will always appear on the tracking target. This feature is only applicable for debugging or demonstration.

Off: When selecting a tracking target, the humanoid box is not displayed at all. This feature is suitable for live streaming scenarios.

Default: After turning on tracking, if there are multiple people in front of the camera and pressing the direction key to select the tracking target, this box will automatically appear. After pressing the HOME key to confirm tracking, this box will disappear and the camera will start tracking.

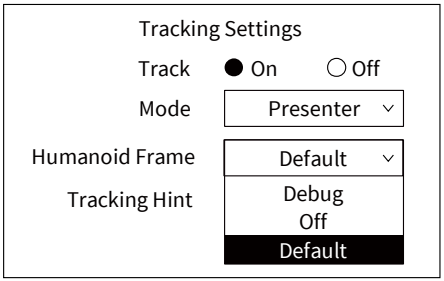

Tracking Hint: On/Off

On: There will be a prompt in the upper left corner of the video during switch tracking.

Off: There is no prompt in the upper left corner of the video during switch tracking. This function is also applicable to live streaming scenarios.

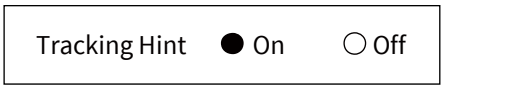

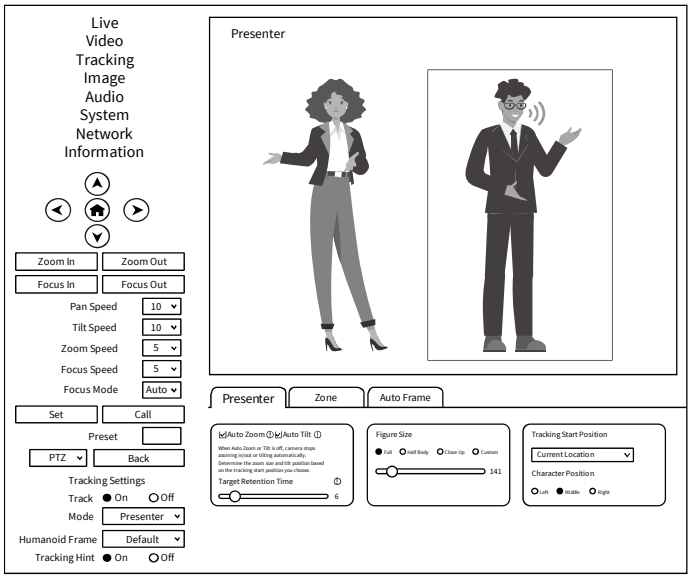

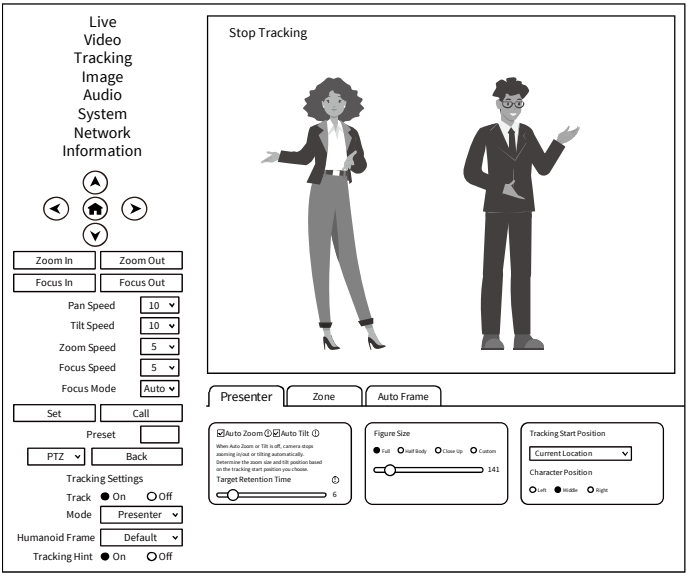

Step 6 Turn on tracking, press the arrow keys to select the tracking target, and then press Home to confirm.

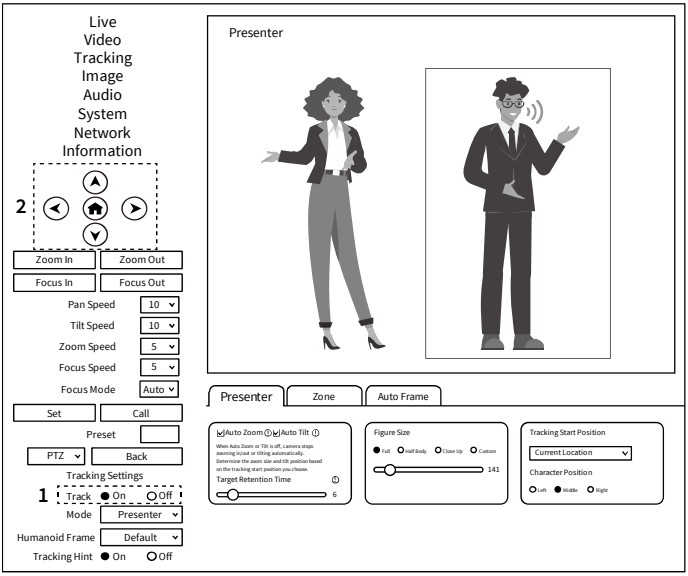

- **Area Tracking (Zone)**

Function: Divide the frequently active areas of the tracking target into several areas (A, B, C, D) as needed, and set corresponding preset positions and save them. When the tracking target enters this area, the camera will automatically call the preset position corresponding to the area to achieve tracking.

Operation Steps:

Step 1 Entering the camera IP address (192.168.100.88) in the browser prompts a login interface. Input the username and password to access the camera WEB interface.

http://192.168.100.88

Step 2 Enter the “Tracking” page and select “Zone”. In the track off state, set the tracking parameters.

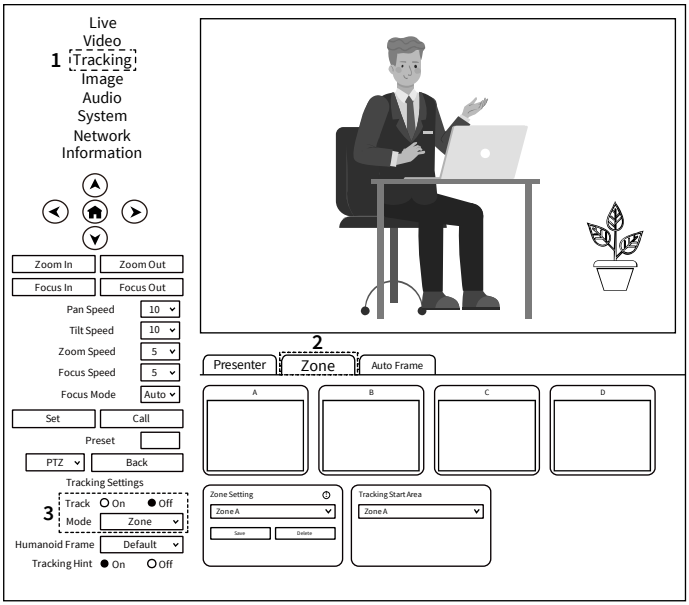

Step 3 Use the directional and zoom keys on the WEB interface to adjust the camera position.

Set multiple preset positions such as zone A from left to right and select “Save” to save.

Set the number of preset positions according to the actual application needs, with a maximum of 4 available. If set incorrectly, you can delete or reconfigure them. Ensure that adjacent areas overlap and are arranged sequentially, which can include crossing letters (e.g., A and C).

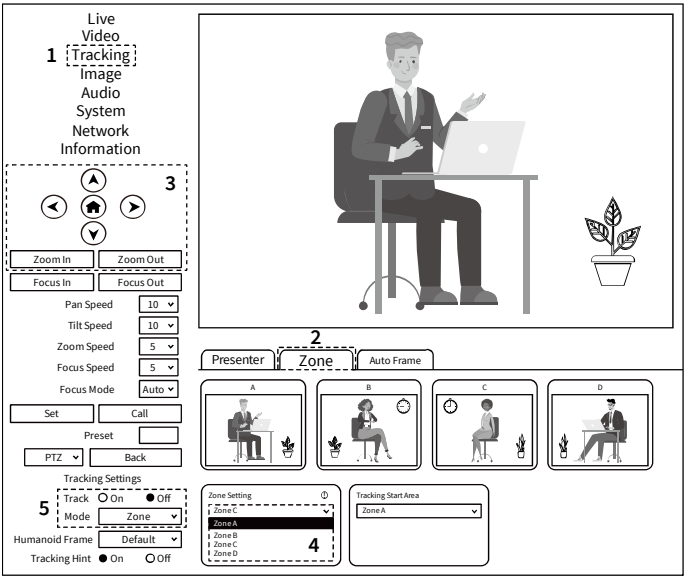

- **Tracking Start Area**

Tracking Start Area: You can choose any zone as the tracking start or end position. When tracking is turn on, the camera will first move to the start zone. If someone enters the video frame, the camera will automatically track them. As the person moves to the next zone, the camera will follow their movement to the corresponding area. Once the person exits the set zones, the camera will remain stationary in its original position.

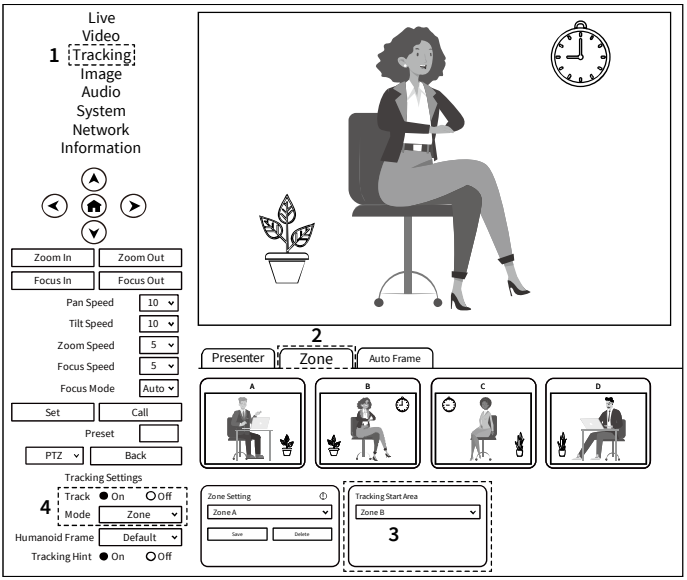

- **Auto Frame**

When the selection ratio is smaller, the proportion of the person in the frame is smaller. If the selection ratio is at its minimum of 200, the camera does not zoom regardless of the size of the person in the frame. When the selection ratio exceeds 200, the camera zooms based on the size and proportion of the person.

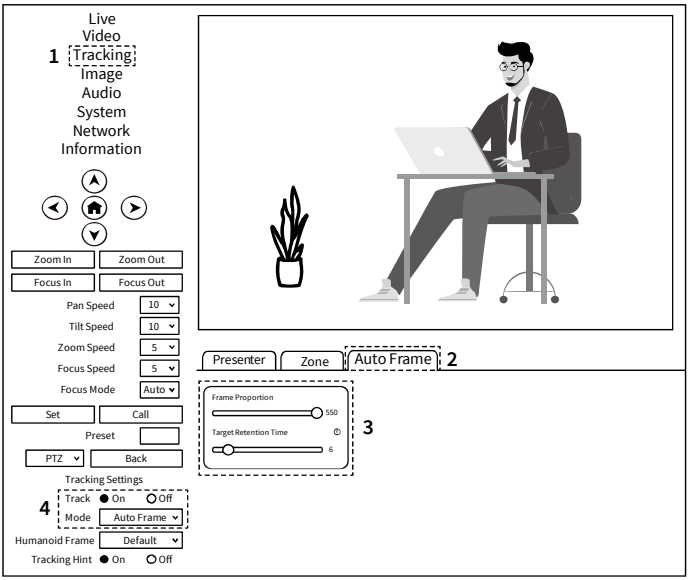

7.2 Remote Control

[F3]:Turn on Tracking **[F4]: Turn Off Tracking**

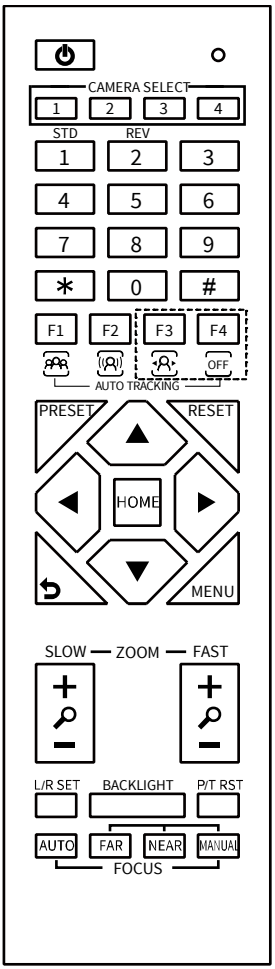

7.3 Target Selection

- **Single Person Scenario**

When there is only one person in the scene, enabling tracking through the web or remote control will directly enable tracking and track the target.

- **Multi Person Scenario**

If there are multiple people in the scene, after turning on tracking, you need to manually select the tracking target. You can use the left and right keys on the remote control or WEB to select the tracking target, and then press the HOME key on the remote control or WEB to turn on tracking and select the target. If the tracking target is not selected, the camera will automatically select the person closest to the center of the image as the tracking target.

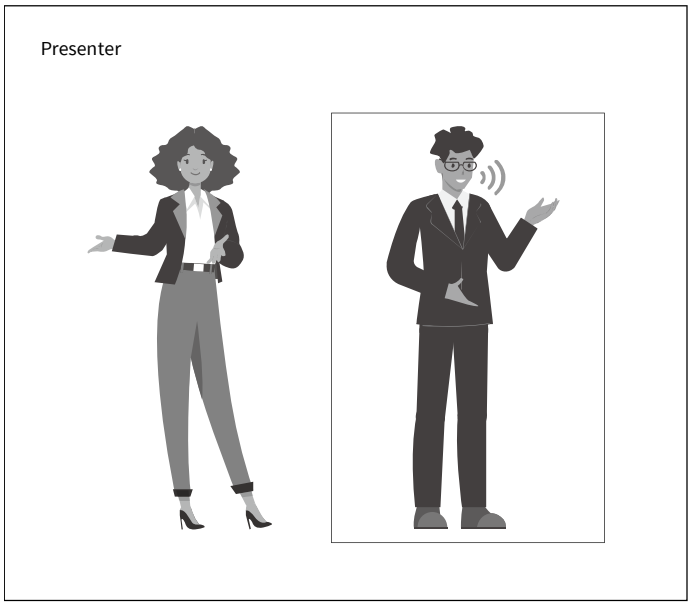

8 Troubleshooting

Image

- The monitor shows no image

1) Ensure that the camera power supply is connected, the voltage is normal, and the power indicator is always on.
2) Turn off the power switch to check that the camera is self-testing.
3) Ensure the cable of video platform and TV that in correct connection.

- Image jitters after the camera is properly connected

1) Ensure that the camera installation is in stable position.
2) Check that any vibrating machinery or object near the camera.

- There is no video image in browser

That do not support IE browser and IE core browser, it is recommended to use Google, Firefox and Edge browsers. The camera video image will be displayed normally.

- Unable to access camera through the browser

1) Using PC to access the network to test that the network access can work properly to eliminate the network fault caused by cable and PC virus until the PC and camera can ping each other.
2) Disconnect the network, connect camera with PC separately and reset the IP address of PC if necessary.
3) Ensure that the IP address, subnet mask and gateway settings is correct.
4) Check that the MAC address is conflicts.
5) Check that the web port is modified, the default setting is 80.

- Forget the camera's default IP address or username

Default IP address: 192.168.100.88; Default username: admin. If you forget the camera's IP address or password, successively press the remote control keys [*] + [#] + [MANUAL] to restore the default settings. After restoring the defaults, you will need to set a strong password again when logging into the web interface.

Control

- Remote control does not work

1) Check and replace with new batteries.
2) Ensure that the camera working mode is correct.
3) Ensure that the address key of remote control can match the camera.
4) Check whether the camera is in tracking mode.
5) Check the camera menu status. If the menu is open, PTZ cannot be controlled by the remote control.

- Serial port cannot control

1) Ensure that the protocol, address and bit rate of the camera are consistent.
2) Ensure that the control cable is properly connected.

All trademarks are the property of their respective owners. ADERTECH assumes no responsibility for any errors that may appear in this publication. Product, pricing and feature information contained herein is subject to change without notice.

© 2023 ADERTECH Co Ltd. ADERTECH logo and its associated visual identity are trademarks or registered trademarks of ADERTECH and/or subsidiaries.