NOTA-5T







NOTA-5T - is speaker system, featuring a rotating silk tweeter and a glass fiber woofer, delivers superior sound quality. Featuring an electric transformer and powerful sound, the NOTA-5T is ideal for use in sensitive areas. Its wing-shaped bridge not only boasts a slim design but also serves as a convenient handle for installation. The frameless magnetic grille blends seamlessly into any interior and complements any style.

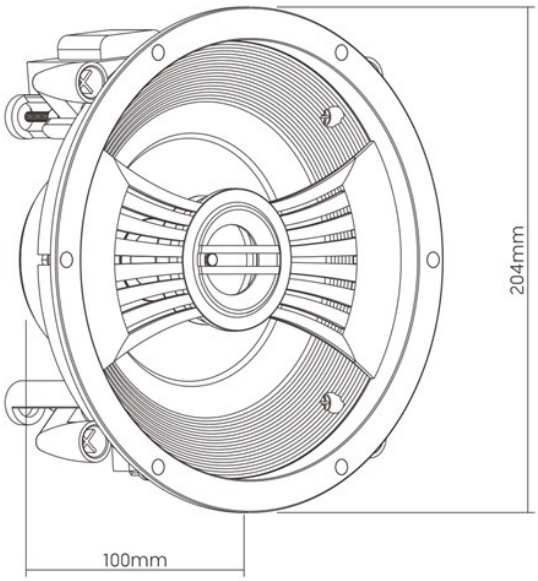

Specification:

SKU	**NOTA-5T**
Type	Ceiling Speaker
Rated Power	40W at 8Ohm/100V
Input Options	8Ohm / 100V
Transformer Taps	3.75W / 7.5W / 15W / 30W / 8Ohm
Ways	2
Drivers	5.25” low-middle range woofer
	0.75” high frequency tweeter
Effective frequency range	70 - 20KHz
Sound Pressure Level	105dB
Sensitivity	89dB, measured at 1W/m
Connection type	Terminal Block
Baffle	Black ABS
Grille	Steel, magnet fixing
Finished colour	White
Mounting options	In ceiling, cutout Ø179mm
Dimension (ØxD)	204×100mm
Weight	2.78kg